SOUTH BEACH
PAN PACIFIC
MARINA SQUARE
Suntec

Overview of South Beach

Overview of South Beach

- South Beach is a mixed used integrated development comprising of the following components
  - South Beach Tower (Office)
  - JW Marriott Singapore South Beach (Hotel)
  - South Beach Avenue (Retail)
  - South Beach Residences (Residential)

- South Beach has been recertified in 2021 with BCA Green Mark Award (Platinum) based on Existing Building for Non-Residential Buildings – Version 3.

- The scope of this Challenge includes
  - South Beach Tower and
  - Its chiller plant system which serves the Office, Retail and Hotel components in South Beach

SOUTH BEACH

Installed Equipment (Air Side)

Item	Equipment	Capacity	Quantity
1	PAU	69.81KW – 514.90KW	4 no for SBT
2	AHU	103.27KW – 159.20KW	2 no per office floor (L1 to L34)

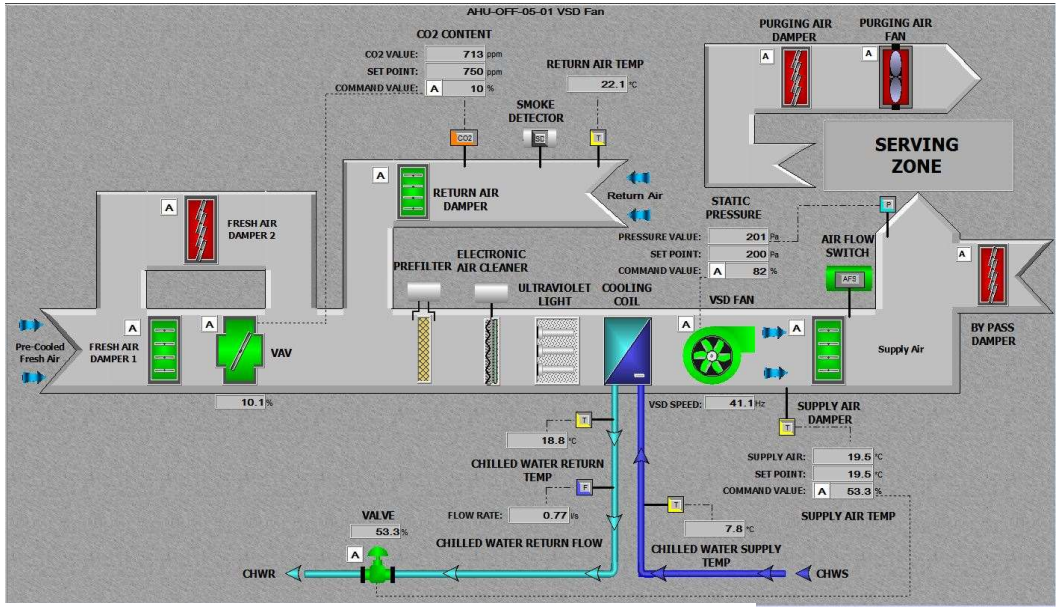

- Total number of AHUs at Office Tower – 62 Nos
- Air Purging - 30 mins Daily
- Average operation hour – 8 am to 6 pm

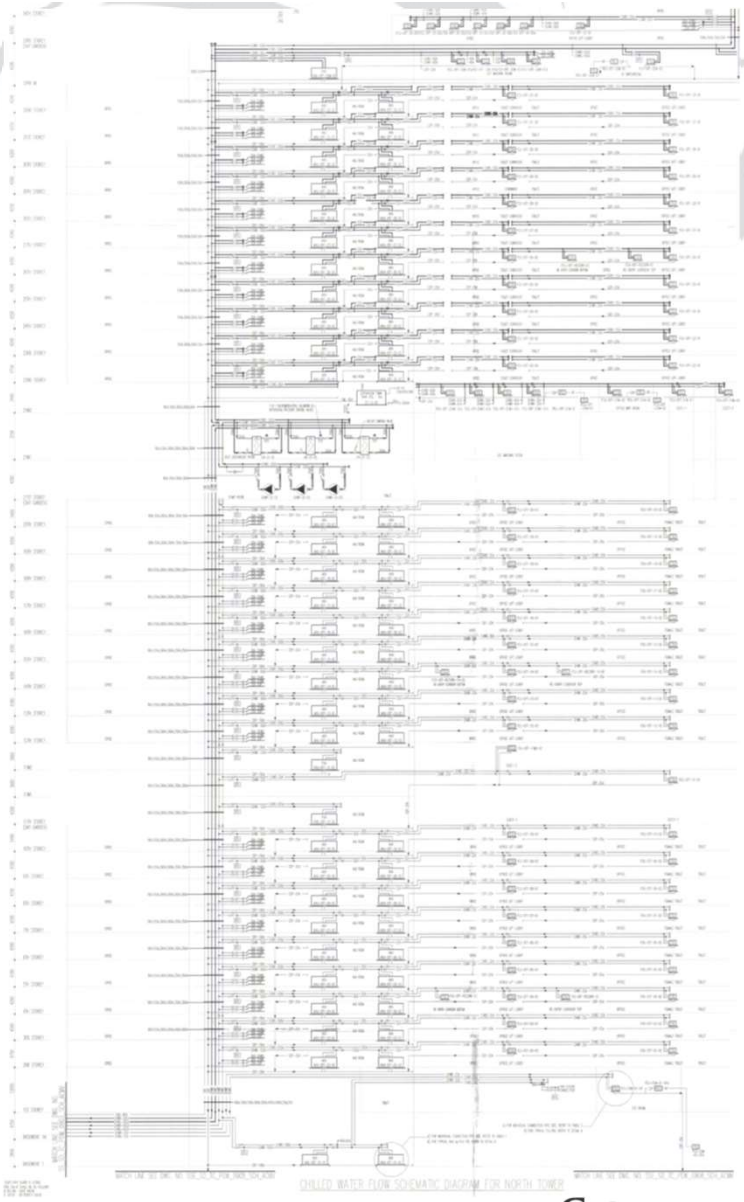

SOUTH BEACH

Installed Equipment (Water Side)

Item	Equipment	Capacity	Quantity
1	Chillers	1000 RT 500 RT	4 Nos 2 Nos
2	Chilled Water Pumps	120L/S; 25.5m head 60L/S; 25.5m head	4 Nos 2 Nos
3	Condenser Water Pumps	190L/S; 20m head 95L/S; 20m head	4 Nos 2 Nos
4	Cooling Towers	1250 RT 650 RT	4 Nos 2 Nos

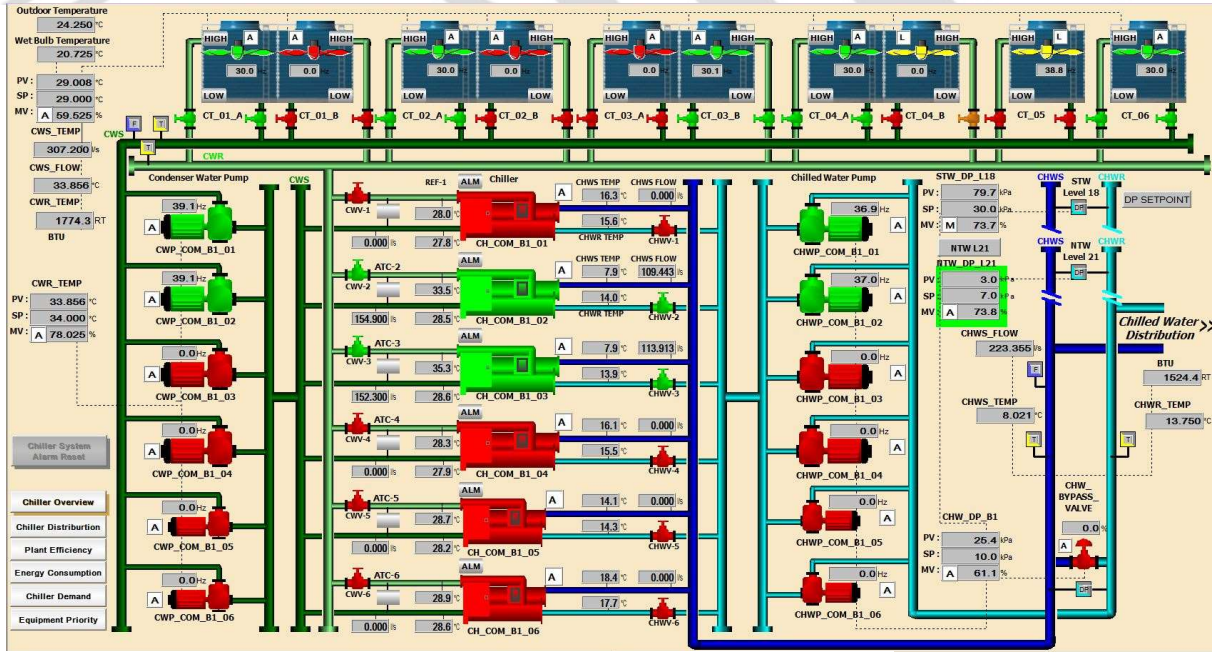

Current Chiller Plant efficiency – 0.62

SOUTH BEACH

Demonstration Challenge

Demonstration Challenge Objectives

This challenge seeks to

- implement innovative technologies and solutions for South Beach Tower ACMV system (including the Chiller Plant system) so as to achieve a total system efficiency of 0.68 kW/RT and below, as per “BCA GM:2021 In Operation” requirements.

This is to be achieved with the following criteria

- no interruptions to business operations
- minimal inconvenience to tenants and building occupants
- reduced carbon footprint
- lower cost of maintenance
- Payback period to be 3 - 5 years

H BEACH

R&I Challenge

Background

- The Authorities issued a guidance note (on 25 May 2021) on improving ventilation and IAQ in buildings amidst the Covid-19 situation. The measures include
  - Deactivate the demand control system (e.g. C02 sensors) and fully open the fresh air dampers to maximize outdoor air intake.
  - Daily air purging before each occupancy

- Although these measures aim to reduce the C02 concentration, it also increase the
  - relative humidity (RH) and
  - energy consumption of the air conditioning system

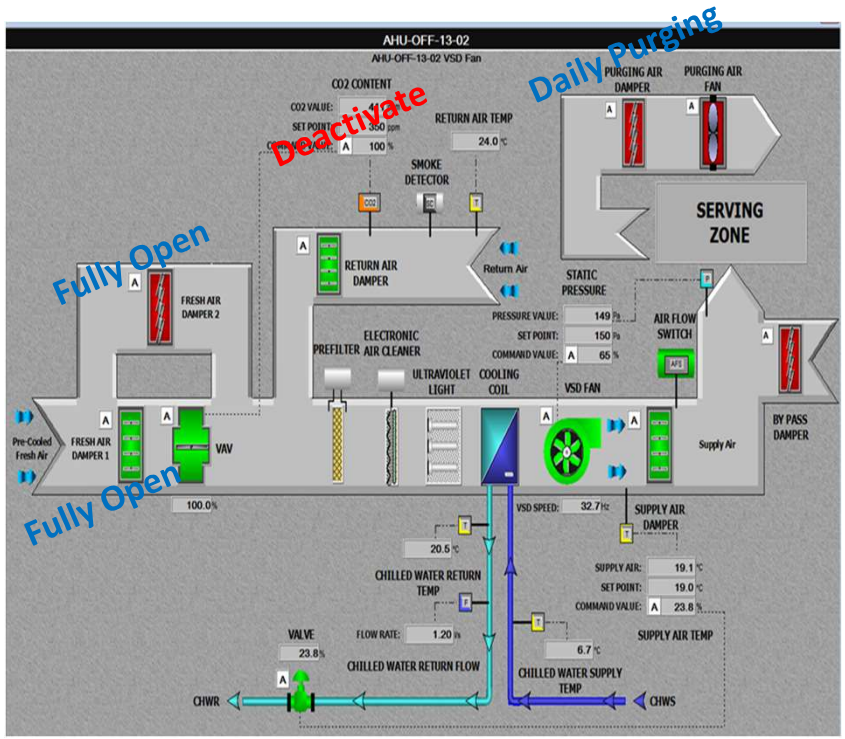

SOUTH BEACH

R&I Challenge Objectives

This challenge seeks to

- Achieve significant improvements to the indoor air quality **and** the system efficiency of the air conditioning system within the office floor.

- This is to be achieved with the following criterias
  - no interruptions to business operations
  - minimal inconvenience to tenants and building occupants
  - reduced carbon footprint
  - lower cost of maintenance
  - Payback period to be 3 - 5 years

SOUTH BEACH

Definition of Success

- Total indoor C02 levels to be < 800ppm (NEA guidelines in the context of Covid)
- Total Relative Humidity to be < 65% (SS554 standards)
- Respirable suspended particles to be < 50 $\mu g/m^3$ (SS554 standards)
- PM2.5 particulate to be < 37.5 $\mu g/m^3$ (SS554 standards) **and**
- **Airside air conditioning system efficiency to be < 0.16kw/RT (GM SLE standards)**

SOUTH BEACH

Q&A

THANK YOU